Reg. No. | | | | | | | | | | [14EC45]

FOURTH SEMESTER B.TECH UNIVERSITY EXAMINATION, JUNE – 2016

ELECTRONIC CIRCUIT ANALYSIS AND DESIGN

Time: 3 Hours **Maximum Marks:70**

Instructions:

Answer any FIVE full questions by choosing at least 2 Questions from each part

Any missing data may be suitably assumed

PART - A

1. a. What do you mean by voltage follower? **02**

   b. Draw the circuit diagram of capacitor coupled voltage follower with high input impedance and derive the expression for finding Z_{in}. **06**

   c. An inverting amplifier constructed using Op-Amp 741 has R1=1kΩ and R2=10kΩ inverting amplifier is to be capacitor coupled with frequency range of 100Hz to 1000 Hz. Calculate the required C1, C2, C3 capacitor values given RL = 250Ω. **06**

2. a. Explain how oscillations are produced in an inverting amplifier due to feed back which circuits are used to prevent oscillations. **08**

   b. Calculate the slew rated limited cut off frequency for a voltage follower using 741 Op-Amp. If the peak sine wave output is to be 5 volts. Determine the maximum peak value of the sinusoidal output voltage that will allow the 741 voltage follower circuit to operate at 800kHz unity gain cut off frequency. **06**

3. a. Draw the circuit diagram of precision full wave rectifier and explain with necessary expressions and wave form. **08**

   b. Draw the circuit diagram of zener diode peak clipper and explain its working. **06**

4. a. Draw the circuit diagram of differentiator circuit using Op-Amp, explain its working and derive an expression for its output voltage. **07**

   b. Using a BIFET Op-Amp design an integrating circuit to produce a triangular output waveform with peak to peak amplitude of 4 volts. The input is a ±5V square wave with a frequency of 500Hz. Given C_i = 0.1μF. **07**

PART - B

5. a. Explain the working of astable multivibrator with circuit diagram and also draw the output waveform. **07**

   b. Using 741 Op-Amp with a supply of ±12 volts. Design an inverting Schmitt trigger circuit to have trigger points of ± 2 volts. **07**

6. a. Explain howbandpass filter can be constructed by cascading LPF and HPF. 03

b. Draw the circuit diagram of single stage First order band pass filter and explain its working. 07

c. Design a first order high pass active filter circuit to have a cutoff frequency of 5kHz. Assume that, the capacitor used is 1000PF. 04

7. a. With diagram explain the operation of successive approximation A/D converter. 08

b. Design a phase shift oscillator as shown in fig 7(b) to have f_o = 3.5kHz. 06

IB (max) = 50μA

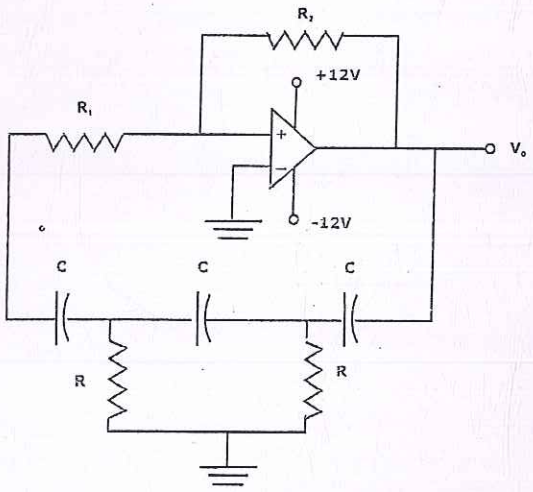

8. a. Draw the block diagram of PLL and explain its working. 07

b. Explain the working monostablemultivibrator using Op-Amp 741. 07